ACR

Tenbury

Multifuel Stove • Model T550/3DA-BG

To be retained by the user for future reference

Thank you for purchasing an ACR Heat Products stove

TECHNICAL MANUAL

MULTI FUEL

SMOKE EXEMPT

AIRWASH SYSTEM

10 YEAR WARRANTY

Serial Number:

T550/3DA-BG 0101 • Version2 date 19/11/24

Important!

To ensure that you gain the most from your purchase, please take a few minutes to read through this manual before lighting the appliance for the first time.

Before installation, please ensure that the correct model has been supplied.

Please make a note of the serial number of your appliance in the space provided on the front cover of this manual as this will be requested if you require technical assistance in the future.

Please also ensure that the commissioning checklist at the rear of the manual is completed in full.

Since April 2002 only registered competent installers can install solid fuel appliances. Installations carried out by non-registered installers must be inspected by local authority building control.

For more information please contact hetas at: www.hetas.co.uk or telephone: 0845 6345626

- The installation of this appliance must comply with current Building Regulations and local regulations, including those referring to national and European standards.
- Do not operate this appliance if it becomes damaged.
- Improper use, maintenance or fitting parts other than those approved by the manufacturer could lead to the appliance becoming damaged or unsafe which in turn could lead to personal injury or damage to the property and will void the warranty.
- The appliance must not be modified in anyway unless authorised by ACR Heat Products Ltd.
- The appliance should be inspected regularly to ensure the airways are clean and free from obstruction and the chimney swept at least once a year.
- The external surfaces of this appliance will be very hot to the touch when in operation and due care will need to be taken when operating the appliance to ensure safety. A fire guard should be fitted if it is likely that the elderly, infirm or children may come into contact with the appliance.
- This appliance must not be used as an incinerator.
- This appliance has been designed for intermittent operation.

T550 Specifications

Nominal heat output	5 kW - Wood	5 kW - Smokeless Fuel
Chimney draft required	12Pa	
Height	550 mm (Internal Box) 585 mm (External Trim)	
Width	550 mm (Internal Box) 620 mm (External Trim)	
Depth	334 mm (Recessed) 344 mm (External Trim)	
Weight	75 kg	
Air Requirement	N/A ***	
Flue Mass Gas Flow	3.6g/s - Wood	3.5g/s - Smokeless Fuel
CO @ 13% O^2	0.08 Wood Vol%	0.07 Smokeless Fuel Vol%
Mean Flue Gas Temperature	263°C - Wood	293°C - Smokeless Fuel
Efficiency	82.9% - Wood	79.8% - Smokeless Fuel
Log Length	Up To 400 mm	
Hearth Temperature	152°C	
Mean CnHm @13% O^2	Wood - 55Nmg/M^3	Maxibrite - 11Nmg/M^3
Mean NOx @13% O^2	Wood -88Nmg/M^3	Maxibrite - 66Nmg/M^3
DIN Plus Dust @13%O^2	Wood -26Nmg/M^3	Maxibrite -11Nmg/M^3

*** Please note that Building Regulations Document J advises that additional permanent air supply is required for appliances with an output of above 5Kw.

With modern properties additional air may be required as Document J suggests that additional air would be a benefit.

- If design air permeability ≥5.0m³/ (h.m²) then 550mm²/kW of appliance rated output above 5kW

Or

- If design air permeability ≤5.0m³/ (h.m²) then 550mm²/kW of appliance rated output
- If in doubt, please consult your registered installer for advice.

DO NOT INSTALL IN A ROOM CONTAINING AN EXTRACTOR FAN UNLESS THE APPLIANCE HAS BEEN CORRECTLY TESTED IN ACCORDANCE WITH BUILDING REGS DOC J

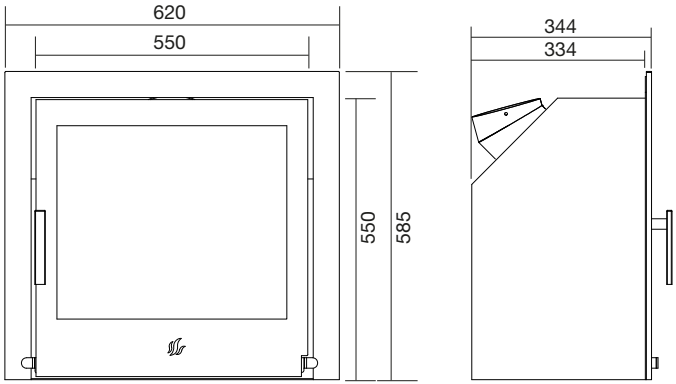

The Clean Air Act 1993 and Smoke Control Areas

Under the Clean Air Act local authorities may declare the whole or part of the district of the authority to be a smoke control area. It is an offence to emit smoke from a chimney of a building, from a furnace or from any fixed boiler if located in a designated smoke control area. It is also an offence to acquire an "unauthorised fuel" for use within a smoke control area unless it is used in an "exempt" appliance ("exempted" from the controls which generally apply in the smoke control area).

In England appliances are exempted by publication on a list by the Secretary of State in accordance with changes made to sections 20 and 21 of the Clean Air Act 1993 by section 15 of the Deregulation Act 2015. Similarly in Scotland appliances are exempted by publication on a list by Scottish Ministers under section 50 of the Regulatory Reform (Scotland) Act 2014.

In Northern Ireland appliances are exempted by publication on a list by the Department of Agriculture, Environment and Rural Affairs under Section 16 of the Environmental Better regulation Act (Northern Ireland) 2016.

In Wales appliances are exempted by regulations made by Welsh Ministers.

- **The Tenbury (T550) has been recommended as suitable for use in smoke control areas when burning wood. As such, when the secondary/tertiary slider is in the closed postion it remains open by 6mm and is prevented from closing by a screw.**

Further information on the requirements of the Clean Air Act can be found here: **www.gov.uk/smoke-control-area-rules**

Your local authority is responsible for implementing the Clean Air Act 1993 including designation and supervision of smoke control areas and you can contact them for details of Clean Air Act requirements.

CO Alarms

It is required by building regulations that whenever a new or replacement wood/solid fuel or biomass appliance is installed in a dwelling a carbon monoxide alarm to BS EN 50292:2002 must be fitted in the same room as the appliance.

The alarm should be installed according to the alarm manufacturers instructions and should not be considered a substitute for the appliance being installed incorrectly or regular maintenance of the appliance or flue system.

Installation Instructions

Important information

Before installation and/or use of this appliance please read these instructions carefully to ensure that all requirements are fully understood.

This appliance must be installed by a registered engineer, or approved by building control, failure to do so may endanger life and property.

All the below instructions should work in conjunction with building regulations document J, if there is a variation the most stringent requirement should be adhered to.

Asbestos

This appliance contains no asbestos, if there is the possibility of disturbing any asbestos in the installation of this appliance then specialist advice must be sought and appropriate precautions taken.

Metal Parts

This appliance may contain sharp metal edges, take care when installing or servicing this appliance to avoid personal injury. Please use appropriate personal protective equipment at all times.

Each installation is unique to the property, the information contained in this manual may not give exact installation requirements for your installation.

The installation must comply with Building Regulations, European Standards and Local authority bylaws.

Fire Cement

Some types of fire cement are caustic and should not be allowed to come into contact with the skin. In case of contact wash immediately with plenty of water.

Location of the unit

The appliance must stand on a non-combustible constructional hearth which is at least 125mm thick with the minimum dimensions as shown in the opposite diagram (please see Building regs. Document J for further information).

If the appliance is to be fitted in a raised application, due consideration should be given to extending the depth of the superimposed hearth to safely contain any falling embers or logs.

The hearth and building construction must be of a suitable material to comply with current building and local authority regulations. The fabrication of the construction must have a suitable load bearing capacity for the appliance and hearth.

If in any doubt, please consult a competent person for advice before proceeding.

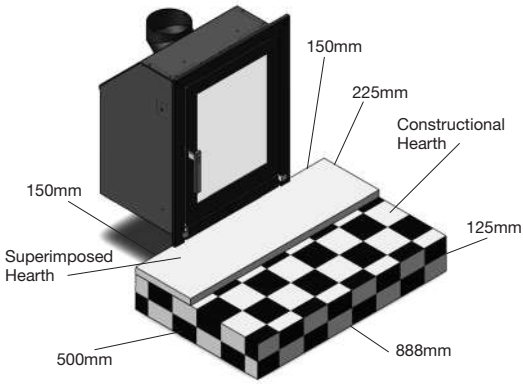

Minimum Builders Opening

For ease of installation the builders opening may be made slightly larger than the appliance dimensions, please see diagram opposite.

The construction of fireplace recess should be of a suitable non-combustible material such as brick or concrete blockwork, and have a minimum thickness of 200mm to the sides and rear of the appliance, unless it is a back to back recess within the same property.

Please refer to building regs document J for more information.

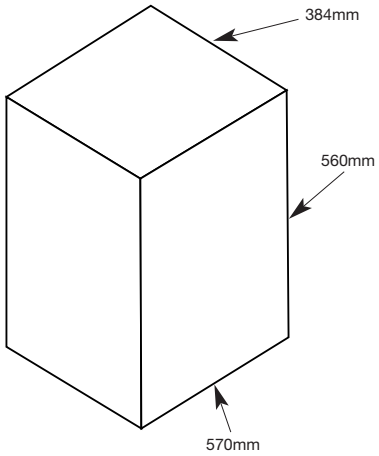

Clearances to combustible materials

Installation into a false chimney breast

All parts of the false studwork chimney must be constructed of a non-combustible material i.e. metal studwork.

Do not use combustible materials within the chequered area (150mm to the sides of the appliance and 300mm to the rear of the appliance).

Do not fill the area surrounding the appliance with insulating material, the void around the appliance must be ventilated to prevent a buildup of excess heat.

There must be minimum ventilating area at both high and low levels of 50 cm² each, the vents should take ambient air from the room in which the appliance is installed and return the warm air back into the same room environment.

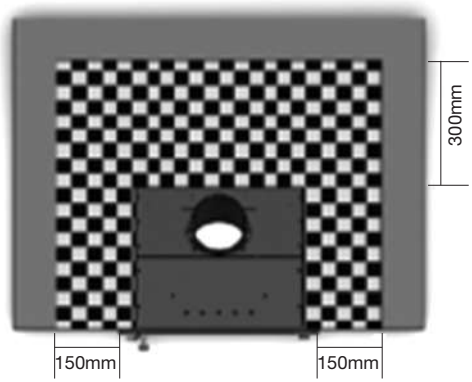

Consideration should also be taken to provide adequate access to the connecting flue for service and maintenance purposes.

Installation into a wooden decorative fireplace

If the appliance is to be fitted in conjunction with a combustible fire surround the minimum clearances must be maintained, please see diagram opposite (150mm to the sides and 600mm above) these dimensions should be adhered to from any point of the appliance to any combustible material.

If granite, stone, marble or any other non-combustible decorative material is to be used as a superimposed hearth and back panel provision should be made for heat and expansion. The use of a slabbed and split back panel and hearth is recommended, if in doubt please seek the recommendation of a competent person or manufacturer of the above mentioned product.

Curtains and soft furnishings should be a minimum of 1m away from the appliance.

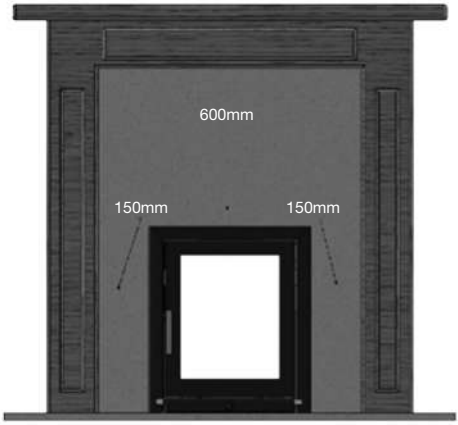

We do not recommend that plasma televisions and expensive artwork are hung over the fireplace.

Flue Requirements

The flue must comply with current Building Regulations Document J.

The construction of masonry, flue block, insulated flue systems and flexible flue liners must comply with the manufacturers instructions at all times.

The flue must be:

- ✓ A 150mm flue diameter is recommended, 125mm may be used if the appliance still has its smoke exempt stop in place
- ✓ In sound condition and provide sufficient draft (minimum 12pa)
- ✓ Suitable for use with solid fuel burning appliances
- ✓ Be able to clean the entire length of the flue system without removal of the appliance
- ✓ Free from deposits
- ✓ Well insulated
- ✓ At least 4.5m in height from hearth level to termination, with no more than 4 x 45° bends in any one flue system and have a maximum horizontal length of no more than 20% of the overall vertical height
- ✓ The termination should be sited as to avoid a negative pressure zone

The flue must not be:

- ✗ Shared with other appliances
- ✗ Weight bearing on the appliance
- ✗ A smaller diameter than the appliance flue collar size (125mm)

Installation of the unit

The appliance is supplied pre-assembled with the flue spigot in the top exit position and the Smoke Exempt stop in place.

The Smoke Exempt stop must not be removed unless the appliance is installed in a non-smoke exempt area and this action should only be undertaken by a competent person.

To remove the smoke exempt stop, remove the M6 smoke exempt bolt from the front of the secondary air slider.

- This appliance **cannot** be installed with a rear flue option.

1. Remove the trim by pulling it towards the front of the appliance.
2. Remove the vermiculite baffle by lifting and rotating through the combustion chamber.
3. Remove the 4 x 4mm bolts located above the baffle.
4. Remove the 2 x 4mm bolts located on the left and right half way up between the outer convection box and the inner combustion chamber.
5. Seperate the outer box from the inner chamber and remove the remaining 2 x 4mm bolts that hold the flue collar in place.
6. Slide the outer box into the prepared opening and affix, connect the flue adaptor and liner to the flue collar, screw and seal using an appropriate sealant.
7. Reconnect the flue collar using the 2 x 4mm bolts, if fitting with a 4 sided trim please fit the trim at this time before the combustion chamber is reinstalled.
8. Slide the combustion chamber back into place and replace the 6 x 4mm screws, replace the baffle and install the trim if not already in place.

Operating your stove

Always ensure that the ash draw is fully located before operation of the appliance

Using your appliance for the first time

- To allow the appliance to bed in, and fixing glues and paint to fully cure, only fire the appliance using kindling and just get hot for at least three fires.
- Before lighting the next small fire please allow the appliance to return back to room temperature.
- During these first small fires you may experience a haze and unpleasant smell as the paint cures, do not touch the paint and keep the room well ventilated.

Please note that during the first firing, we recommend a small fire is lit and that you slowly increase the temperature to enable the various parts to expand normally.

You may also experience fumes and a haze being given off by the stove during the first firing and possibly for the next couple of firings as the paint cures. This is normal but please ensure that the room is well ventilated during this period.

The appliance should not be operated in

mild weather with smokeless fuel. Under certain weather circumstances e.g. fog the chimney will not draw sufficiently and could cause asphyxiation. Either await better weather conditions or burn wood only.

In the rare event of a malfunction due to overheating or a chimney fire, the air slides should be shut down completely and the fuel allowed to burn out. In the event of a chimney fire, once the air slides have been closed completely, dial 999 for assistance. If the appliance has overheated, the appliance and flue will need to be inspected for any damage before it can be operated again.

Recommended Fuels

✓ **Wood**: hardwood such as ash, oak and beech which have been cut for at least 2 years and stored under shelter. The logs should have a maximum moisture content of 20%. Maximum log length 400mm, maximum width 125mm.

✓ **Smokeless Fuels**: below 20% Petroleum coke content such as Anthracite, Phurnacite, Maxibrite suitable for use with a closed heating appliance.

Prohibited Fuels

✗ **Green wood**: i.e wood which is less than 2 years old with a moisture content of above 20%

✗ **Recovered wood:** i.e pallets, railway sleepers etc. These will have been chemically treated and will pollute the atmosphere and possibly overheat the appliance.

✗ **Housecoal or Bituminous coal**: these fuels will soot up the airways of the stove and possibly overheat the appliance.

✗ **Petroleum Based Coke**: over 20% content - this will overheat the appliance and possibly damage the unit.

✗ **Liquid fuels**

✗ **Paraffin based fire lighters**

Always check with your dealer or directly with the manufacturer as using the incorrect fuel may invalidate your guarantee and damage your appliance.

Instructions for use with wood

- Open the secondary air slider to the left hand side of the door, and open the primary air slider to the right hand side of the door by fully pushing the levers inwards.
- Lay firelighters or rolled up newspapers on the grate and add a small amount of kindling wood to the top. Place 1 or 2 small logs on the top.
- Light the newspaper or firelighters using a long taper and push the door closed but do not engage the locking handle fully.
- When the fire is burning fiercely, after a couple of minutes add more logs and close the door.
- When the fire has become established, close the primary air, to the right hand side of the door, by pulling the lever fully outwards.
- The burning rate can be altered by moving the secondary air slider, to the left hand side of the door - pull the lever outwards to close down and push the lever inwards to increase the burn rate.
- Care should be taken to ensure that the logs are not placed higher than the log guard allows.

Instructions for use with smokeless fuel

- Open the secondary air slider to the left hand side of the door, and open the primary air slider to the right hand side of the door by fully pushing the levers inwards.
- Lay firelighters or rolled up newspapers on the grate and add a small amount of kindling wood to the top. Place a small quantity of smokeless fuel on top.
- Light the newspaper or firelighters using a long taper and push the door closed but do not engage the locking handle fully.
- When the fire is burning fiercely, after a couple of minutes add more smokeless fuel and close the door.
- When the fire has become established, close the secondary air by 50%, to the left hand side of the door, by pulling the lever outwards.
- The burning rate can be altered by moving the primary air slide, to the right hand side of the door - pull the lever outwards to close down and push the lever inwards to increase the burn rate.
- Care should be taken to ensure that the firebox is not overfilled with smokeless fuel - it should be no higher than the log guard.

Re-fueling

When refueling the stove **always refuel onto a bed of hot embers**, fully open the secondary and primary air controls until the new fuel is well alight, before adjusting the air controls for the desired setting.

If there is insufficient burning material in the firebed to light a new fuel charge, excessive smoke emission can occur. Refueling must be carried out onto a sufficient quantity of glowing embers and ash that the new fuel charge will ignite in a reasonable period. If there are too few embers in the fire bed, add suitable kindling to prevent excessive smoke.

Fuel overloading

Never overload the stove - it will work very well with two medium sized logs. The amount of fuel specified in this manual should not be exceeded, overloading can cause excess smoke.

Operation with door left open

Operation with the door open can cause excess smoke and overfirring of the appliance. The appliance must not be operated with the appliance door left open except as directed in the instructions.

Dampers left open

Operation with the air controls or appliance dampers open can cause excess smoke. The appliance must not be operated with air controls, appliance dampers or door left open except as directed in the instructions.

Never leave the stove unattended until the new fuel is well alight.

Persistent fume emission is dangerous and must be investigated.

If fume emission persists, open doors and windows to ventilate the room and let the fire die out. Have the chimney inspected for blockages and clean if required. Do not relight the fire until the cause has been found. We recommend that you seek professional advice.

This appliance has been designed to be burned with the door closed at all times other than when refueling.

It should not be operated as an open fire.

Typical refueling intervals for wood is 1 hour and smokeless fuel is 1 hour.

Maintenance

We recommend that the appliance is serviced annually by a competent engineer to ensure it's continued safe operation.

Daily Maintenance

The grate should be cleaned regularly and the ash pan emptied daily.

Do not empty the ashpan when hot, please note that the glove provided is not intended for emptying hot ashes, never leave hot ashes inside the property, always dispose of the hot ashes safely outdoors.

Never allow the ash in the ashpan to overfill allowing ash to be in contact with the underside of the grate.

This will overheat the grate and cause premature wear and distortion.

Periodic Maintenance

- The chimney should be swept at least once a year together with the flue pipe connection. Care should be taken to ensure that there is not a build up of soot on the baffle and in the airways of the appliance.
- If the appliance has not been operated for long periods, the flue should be inspected and swept before use to ensure there are no blockages within the flue.
- The internal vermiculite panels of the appliance should be checked regularly for soundness. If any wear and tear is found, we recommend these parts are replaced immediately.
- Check the rope door seals are intact and are not worn. These should be replaced on an annual basis to ensure the correct operation of this appliance.
- The glass can be cleaned using a soft damp cloth and window cleaner or a stove glass cleaner (available from your local stockist)
- Lubricate all moving parts with a high temperature grease such as copper grease to ensure smooth operation. i.e., Door hinges, handle, roller cam, air sliders etc

Internal refractory panels

During the normal operation of your ACR stove, the refractory panels will experience heating and cooling. Sometimes minor hairline cracks can occur. All ACR stoves have a steel or cast iron structure behind the panels and therefore even if the cracks get larger, the stove will still operate safely.

It is advisable to consider replacing the internal panels when:

- The cracks are greater than 3mm.
- The surface of the refractory panel has eroded more than 25% of it's original thickness, or
- When the panel starts to crumble and fall apart in chunks.

To prevent the issue from happening and prolong the life of your internal panels, the homeowner should "burn in" the refractory panels in the new appliance by building small kindling fires to begin with and then gradually working up to a larger fire. When adding more fuel to the fire, caution should be used to prevent excessive mechanical damage to the panels.

ACR heat products bears no responsibility for the loss or damage of any kind to the internal panels during or after installation or during the normal operation of the appliance.

Use only replacement parts recommended by the manufacturer.

Commissioning Check List

Please tick boxes when each procedure is completed

- ☐ Ensure the serial number has been recorded on the front of this manual for any future use
- ☐ Ensure the door seals are in good condition and that the glass is secured correctly in the door (do not over tighten the glass as this will prohibit its expansion and could cause the glass to crack)
- ☐ Ensure that all internal components are fitted correctly (these may have shifted in transit)
- ☐ Ensure that the appliance operates correctly during the first firing
- ☐ Ensure the customer is aware that fumes may be given off during the first firings as the paint cures
- ☐ Advise the customer on the safe operation of the appliance
- ☐ Leave the instruction manual, operating tool (if included) and glove for the customer.
- ☐ Record the flue draught reading of the appliance

Troubleshooting

Problem	Probable Cause	Action Recommend
Fire difficult to start / goes out	• Green wood / wet wood	Use hardwood logs with a maximum moisture content of 20%
	• Logs are too large	Use kindling and small logs to start the fire and once established use split logs
	• Not enough primary air	Open air control
	• Insufficient draft	Check the flue is not obstructed
Fire burns too quickly	• Too much draft	Reduce the air control
	• Excessive draft	Install a draft stabiliser
Smokes on initial lighting	• Flue is cold	Burn paper and kindling to increase heat in flue
Smokes while burning	• Insufficient draught	Check the flue is not obstructed
Low heat output	• Poor quality wood	Use seasoned Hardwood (this has a Higher calorific value)

Parts Information

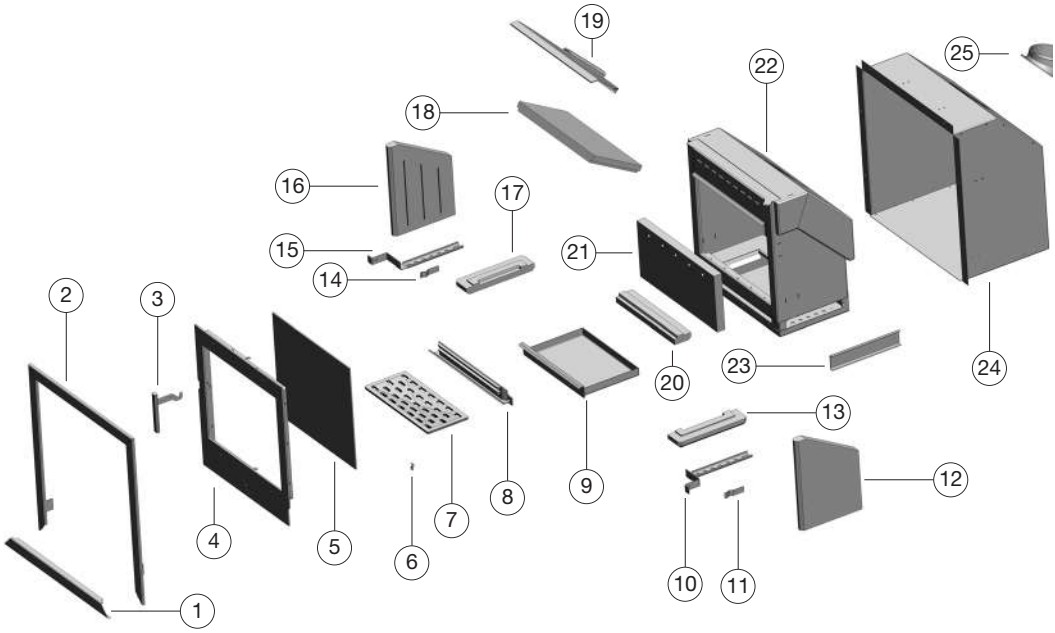

Diagram No.	Part No.	Description
1	4SFT550I	Four sided trim attachment
2	TB2-07-00-00	Three sided trim
3	TB-03-10-00	Handle
4	TB2-03-00-00BG	Door (no rope or Glass)
5	TS/4/460X380BG	Glass
6	TGLASSCLIP	Glass clip (four required)
7	07BL6757-08-00-00	Multifuel cast iron grate
8	TB2-04-00-00	Log guard
9	TB2-05-00-00	Ashpan
10	TB2-02-11-04	Primary air control slider
11	TB-02-15-00	Air control slider linear spring
12	TB2-06-06-00	Right side accumote panel
13	TB-06-02-00	Right bottom accumote base panel
14	TB-02-14-00	Air control slider linear spring
15	TB2-02-11-04	Secondary air control slider
16	TB2-06-04-00	Left side accumote panel
17	TB-06-02-00	Left bottom accumote base panel
18	TB2-07-03-00A	Lower vermiculite baffle
19	TB2-02-17-00	Upper steel baffle
20	TB2-06-01-00	Rear bottom accumote base panel
21	TB2-06-03-00	Rear tertiary accumote panel
22	TB2-02-00-00	Combustion chamber
23	TB2-02-11-05	Air control slider cover plate (two required)
24	TB2-01-00-00	Outer convection box
25	TB-01-08-00	Flue collar
Not shown	TB2-02-14-00	Rear direct air intake collar
Not shown	DOORROPE10MM	Door sealing gasket (10mm (2m needed)
Not shown	GLASSROPE8MM	Glass / collar sealing gasket (8X3mm (glass 2m / collar 1m)
Not shown	GLASSSCREW(M5 x 8)	Glass screws
Not shown	TM5x10	Handle screw

Warranty Information

10 YEAR WARRANTY

With the aim of constantly improving our products, all modifications considered necessary may be made without notice.

This manual is correct at time of printing.

Our appliances are guaranteed against faults and hidden defects subject to the following conditions:

The appliance must have been installed by a registered competent installer (e.g. HETAS) or inspected by local authority Building Control.

The appliance must be installed and operated in accordance with our instruction manual.

All Stoves are covered by a 10 year warranty which covers all stove body castings / stove body steel panels. It does not include consumable items such as grates, firebricks, vermiculite panels, baffles, log guards, door rope seals and glass, ashpan runners, painted/enamel finishes. This 10 year warranty is only applicable when the stove is purchased from one of our recommended retailers.

If a stove from any of our brands is purchased from a non-recommended retailer then only a 12 month warranty will be applicable as outlined below.

All stoves are covered by a 1 year warranty when purchased through a non-recommended retailer. The warranty covers the stove body castings only and does not include consumable items such as grates, firebricks, vermiculite panels, baffles, log guards, door rope seals and glass, ashpan runners, painted/enamel finishes.

For full warranty exclusions and limitations please see website.

Your statutory rights are not affected by this warranty.

The specifications within this document are provided for information purposes only and are under no circumstances binding.

Warranty Claim Form

In the unlikely event of a warranty claim, please complete the below claim form and return it to your supplying dealer:

Customer Name:

Customer Address:

Postcode:

Daytime Tel:

Mobile Tel:

Model Name:

Model Number:

Serial Number:

Date of purchase:

Date of installation:

Installer's Name and address:

Installer's Registration Number:

Building Control Certificate Number:

(if not installed by a registered competent installer)

Dealer Name and address:

ACR

ACR Heat Products Limited, Unit 1, Weston Works,
Weston Lane, Tyseley Birmingham B11 3RP, England.

- Tel: 0121 706 8266
- Fax: 0121 706 9182
- E-mail: enquiries@acrheatproducts.co.uk
- www.acrstoves.com